APPLICATION OF NAMED ENTITY RECOGNITION IN DISEASE PREDICTION THROUGH SYMPTOM RECOGNITION IN NON-CLINICAL FILIPINO FREE-TEXT

A Thesis Proposal
Presented to the Faculty of the
College of Computer and Information Sciences
Polytechnic University of the Philippines
Sta. Mesa, Manila

In Partial Fulfillment of the Requirements for the Degree
Bachelor of Science in Computer Science

CABANA, LANCE CHRYSLER M.
DINGCON, MIGUELLE EDRIENNE A.
MENDINUETA, CHRISTIAN JAY M.
SORIÑO, ISAAC S.

2022

TABLE OF CONTENTS

	Page
TITLE PAGE	**i**
TABLE OF CONTENTS	**ii**
LIST OF TABLES AND FIGURES	**iv**
1 - THE PROBLEM AND ITS SETTING	
Introduction	1
Theoretical Framework	4
Conceptual Framework	8
Statement of the Problem	9
Hypothesis	10
Scope and Limitations	10
Significance of the Study	11
Operational Terms	12
2 - REVIEW OF RELATED LITERATURE AND STUDIES	
The use of electronic health records as a resource for NLP	13
NLP analysis methods in clinical text	14
Named entity recognition in clinical text	18
Disease prediction by utilizing medical data	19
Learning as a method to create healthcare applications	20
NLP in low-resource languages and non-clinical text	21
Synthesis of the Study	23
3 - METHODOLOGY	
Research Design	25
Sources of Data	25
Sampling Technique	26
System Architecture	27
Instrument	30
Software Development	31
Data Generation Procedure	34
Statistical Data Analysis	355
Ethical Considerations	38

References 39

Appendix

Appendix 1: Curriculum Vitae 48

Appendix 2: Questionnaire 52

Appendix 3: Experiment Papers 566

LIST OF TABLES

Table #	Title	Page
1	*Disease Map, taken from RiteMed website data.*	30

LIST OF FIGURES

Figure #	Title	Page
1	*Indonesian-English ICD-11 disease information retrieval system*	5
2	*Architecture of GRU and LSTM cells (Gruber & Jockisch, 2020)*	6
3	*Conceptual Framework*	8
4	*Diagram of associative feature information extraction*	14
5	*System Architecture*	27
6	*Agile Methodology (Nvisia Learn, 2020)*	32

Chapter 1

THE PROBLEM AND ITS SETTING

This chapter provides a brief overview of the study. It details the background of the study and what it aims to achieve, and seeks to describe a general description of the methods that will be used to accomplish its objectives.

Introduction

Throughout the rise of technology in recent decades, a multitude of computerized systems have been implemented in a variety of fields such as healthcare. Specifically, technological developments in healthcare have been attributed to the creation of electronic health records and its manipulation, laboratory information systems, and symptom checkers. These are defined as clinical decision support systems (CDSS) (Wasylewic & Scheepers-Hoeks, 2019). The main function of these systems is to improve efficiency of medical-related tools and resources, and allow for a more complex yet reliable decision-making that can be applied to users such as scientists, as well as patients in hospitals. CDSS may utilize knowledge-based systems or rely on algorithmic concepts such as artificial intelligence and machine learning in order to better assist medical personnel (Sutton et al., 2020).

An example of a CDSS is a symptom checker system. Such systems gather symptom information from users and determine the most likely possible diseases in order for users to obtain more information, such as regarding the cause of the symptoms and whether or not to seek medical care (Meyer et. al., 2020). While mostly detached from the clinical process, it is part of the systems that hospitals and health-related services provide

to users. There are many examples of this that are available to be accessed online (Semigran et al., 2015). These resources are mostly available in the form of the English language. However, in countries that do not have English as a primary language, users may experience cultural variation and language barrier problems. Dreisbach et al. (2019) states that there is a 'lack of diverse representation' that can be found within systems that analyze medical information such as symptoms. Online symptom checkers are highly concentrated on English as their medium, leaving a gap for local accessibility due to the failure to recognize Filipino symptoms and counterparts for certain diseases. In order to address both issues of accuracy and locality, there is a need for a Filipino-oriented system that would address some form of analysis of symptoms.

The process of recognition of symptoms usually occurs in electronic health records (EHRs) – clinical information that can be associated with the health of an individual (U.S. Institute of Medicine, 2003). The information that is processed can usually be found in unstructured free text narratives within EHRs (Koleck et al., 2019). Some of the current methods used for the processing of unstructured EHR data is through the concept of natural language processing (NLP), a field of computer science that deals with the computerized approach of analyzing text (Liddy, 2001). Many EHR analysis systems use named entity recognition (NER) to accomplish text analysis. NER deals with the searching, determination, and classification of entities that can be found in a given text (Mohit, 2014).

Current NER approaches in medical records often utilize the concept of long short-term memory (LSTM). LSTM is a recurrent neural network meant for processing sequences of data, and has been utilized in many fields such as healthcare (Schmidhuber, 2021). Studies that utilize LSTM often only focus on classifying entities based on patient information, such as diseases and symptoms, directly from text in medical records (Wu et.

al., 2017; Qin et. al., 2021). Other NLP approaches implement the prediction of diseases based on symptom data by utilizing different machine learning concepts (ML), but utilize datasets that contain already extracted features (Dulhare, 2018; Hashi et al., 2017). Other recurrent neural networks, such as GRU, are simpler but maintain high computational efficiency (Qin et. al., 2021), but differ in specificity and sensitivity (Gruber and Jockisch, 2020).

Additionally, another form of valuable yet mostly unused data source can be found in non-clinical information (Kushwaha & Kar, 2021). Non-clinical text is considered to be a challenge compared to clinical text, as the contents of clinical text are more likely to be less varied, and therefore simpler (Campbell & Johnson, 2001). Developments of text processing in this type of data will prove useful in the creation of supplementary health systems such as automated preliminary diagnosis.

The main concept of the study is to create a CDSS connect both the analysis processes of NER and disease classification, and determine its effectiveness in non-clinical text. The objective is to create a joint model that uses both NER and ML techniques in order to recognize symptom-related features in Filipino free-text non-clinical data, specifically in the Tagalog dialect, and to have a basic prediction of diseases that are associated with the symptoms that were identified.

The auxiliary goal of the study is to serve as an initial resource in the creation of health-related corpora in the Filipino language. By establishing a base for detection of symptoms in Filipino language text using existing health-related resources in Filipino, further work may be done on related methods of disease classification.

Theoretical Framework

The majority of use cases in natural language processing involve its usage in only a few languages, with many NLP resources specializing in the use of English (Bender, 2019). Thus, many languages are not given as many resources to work with to be able to handle language processing. These resources may include data sources, algorithms, and dictionaries that are important for constructing language processing systems. A review was accomplished regarding current approaches on creating more natural language processing for low-resource languages (LRLs), and states that starting development in these 'low-resource' languages will open up economic perspectives (Magueresse et al., 2020) depending on the field it is applied to. The issues discussed in the review that are relevant to the study are classification problems due to a lack of "quality and quantity of available supervised classification data", and suggests manually creating datasets that include text classifications to be able to perform NLP work. The review also discusses the issue of dataset diversity, and states that further innovations on where datasets will be gathered should be highlighted. The study will base its own architecture using the observations presented by Magueresse et. al. (2020) by performing the manual creation of a Filipino-oriented dataset that is related to the field of healthcare. Specifically, the dataset would contain Tagalog disease and symptom information in order to align itself with the objectives of the study.

Figure 1 also serves as part of the basis for the framework of the study. A system was accomplished regarding the utilization of International Classification of Diseases and Related Health Problems in natural language processing (Putra et al., 2019). The study used voice recognition of Indonesian patients complaining about gastrointestinal-related pain as user input, and identified words that signify symptom-related information.

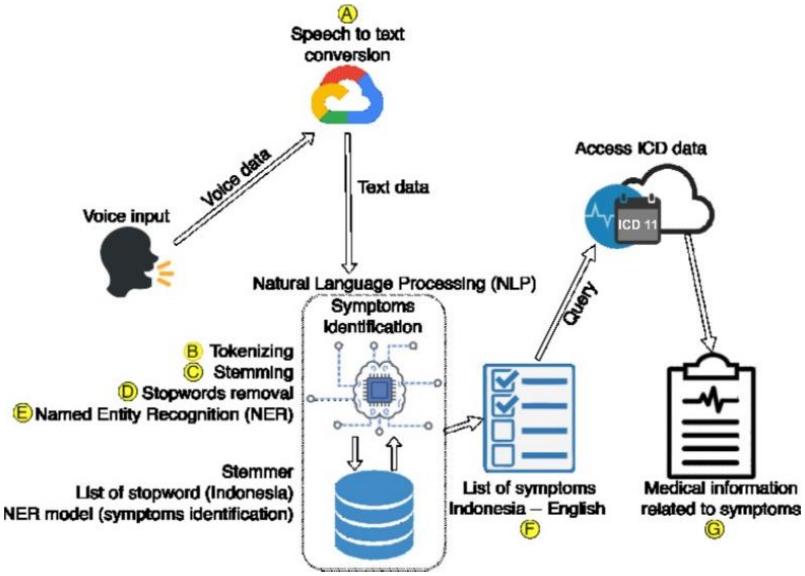

Figure 1. Indonesian-English ICD-11 disease information retrieval system

The study used natural language processing methods such as tokenizing, stemming and named entity recognition using Bi-directional LSTM and Conditional Random Fields (Bi-LSTM-CRF) to perform symptom entity classification. Bi-LSTM-CRF is a combination of LSTM and the statistical concept of conditional random fields (CRF), which can assign labels to samples while considering the presence of 'nearby' samples. It is also bidirectional, in that it considers both the left-to-right and right-to-left versions of the input. CRF, and its combination with LSTM, has been used for a variety of purposes in natural language processing (Dong et al., 2016). The system achieved a 74.3% accuracy in recognizing symptoms from Indonesian text, and notes that the accuracy can potentially vary depending on the size and analysis process of the dataset. However, the disease classification method in the study only makes use of translation and search methods to classify the diseases, and the resource utilized is ICD-11, an English dataset of disease codes specified by the World Health Organization. The researchers seek to

improve on the methods used in this study by specifying a different NER algorithm, and to use same-language resources for both entity classification and disease prediction.

Gated recurrent units

While LSTM methods are currently popular and utilized for their accuracy capabilities, a variant of LSTM called gated recurrent units (GRUs) were introduced in 2014 by Cho et. al (2014). While LSTM cells contain 3 gates to process storage of long-term information, GRU cells only contain 2, allowing for a more efficient computation and training time. Figure 2 details the difference in architecture for a memory cell between GRU and LSTM. GRU cells have *r* as a reset gate and *z* for the update gate. LSTM cells have *i* for the input gate, *f* as a forget gate, and *o* as an output gate.

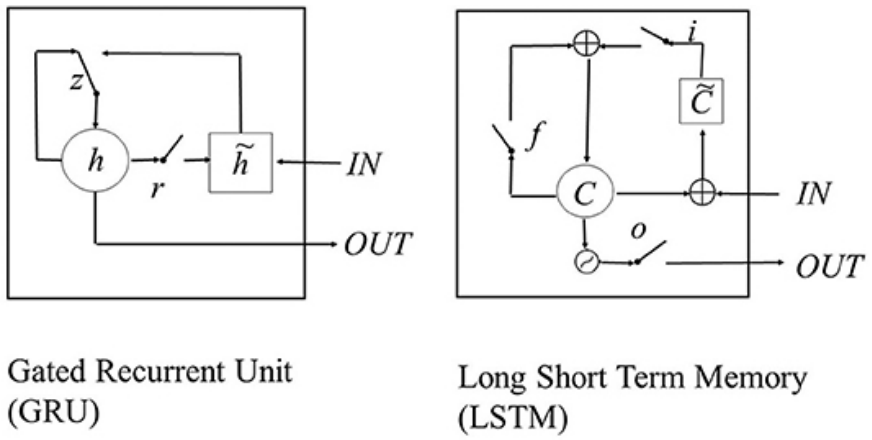

Figure 2. Architecture of GRU and LSTM cells (Gruber & Jockisch, 2020)

A study was accomplished to compare the specificity and sensitivity of GRU cells and LSTM cells. These categories were tested by utilizing the two algorithms in motive classifications of text. The study found that GRU cells have

higher specificity (does not “strongly adopt onto the data”) and lower sensitivity (identifies less prevalent content more) than LSTM cells. Also, because LSTM cells are more sensitive compared to GRU cells, problems may arise when utilizing small sample sizes with LSTM due to overfitting (Chung et. al., 2014). Because the study will utilize a small sample size, the GRU NER will be the algorithm that will be chosen over LSTM to achieve the objectives of the study.

Naive-Bayes classification

The Naive-Bayes method is a classification algorithm that is defined as an application of Bayes’ theorem:

$$P(A \mid B) = \frac{P(B \mid A)P(A)}{P(B)}$$

with the assumption that each feature being analyzed in a system is independent of each other, where the presence of a particular feature does not affect the presence of other features. This algorithm was utilized for the model as its capability to “estimate the means and variances of the variables necessary for classification” can be accomplished even with a small data set (Vijayarani & Dhayanand, 2015).

Conceptual Framework

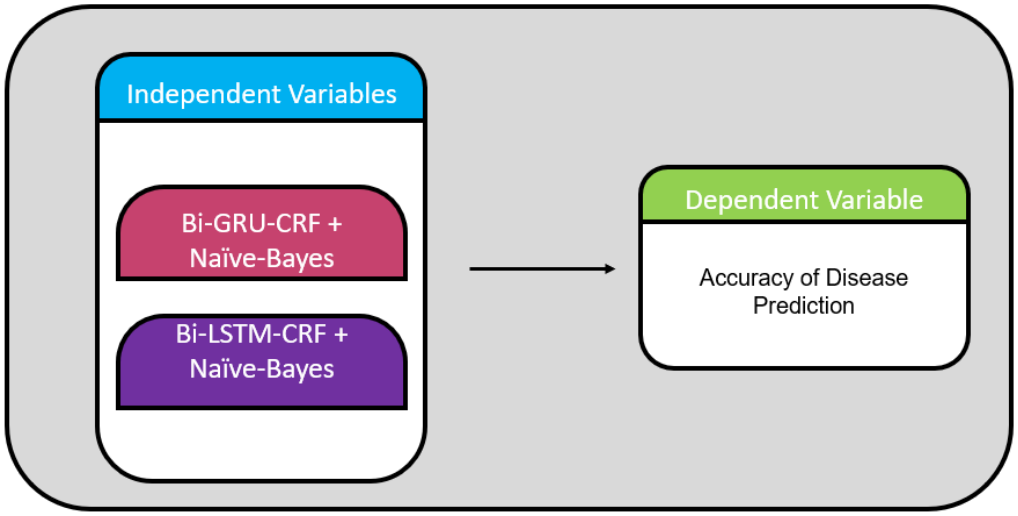

Figure 3. Conceptual Framework

The independent variable of the study will be the algorithms that will be used to perform the named entity recognition process in the proposed model. The NER algorithms will be tested, and measurements will be taken to observe the accuracy of the algorithm on recognizing the correct symptoms that can be found in non-clinical Filipino text, as well as its effect on the accuracy of disease prediction given by the Naive-Bayes classification algorithm.

The dependent variable of the study will be the accuracy of the system given a model with specified algorithms. The accuracy of the system will be measured using the F-measure discussed in the Statistical Data Analysis section.

Statement of the Problem

This study aims to develop a Filipino-oriented system contributing to the lack of diversity in symptom resources and application of NER methods, by implementing a model that performs symptom recognition in non-clinical Tagalog free-text through Bi-GRU-CRF named entity recognition and disease prediction through Naive-Bayes text classification. Because the disease prediction is reliant on the NER process, the study seeks to solve the accuracy of the system by comparing the model to current approaches in named entity recognition. Specifically, this study seeks to answer the following questions:

1. What is the precision, recall, and f1 score in symptom recognition of non-clinical Tagalog free-text using the named entity recognition methods of:
    1. Bi-GRU-CRF; and
    2. Bi-LSTM-CRF?
2. What is the precision, recall, and f1 score in disease prediction using Naive-Bayes on the extracted symptom features in the Tagalog language using the models:
    a. Bi-GRU-CRF with Naive-Bayes; and
    b. Bi-LSTM-CRF with Naive-Bayes?
3. Is there a significant difference between Bi-GRU-CRF with Naive-Bayes and Bi-LSTM-CRF with Naive-Bayes in terms of accuracy in disease prediction?

Hypothesis

H_0: There is no significant difference between Bi-GRU-CRF with Naive-Bayes and Bi-LSTM-CRF with Naive-Bayes in terms of accuracy in disease prediction.

H_A: There is a significant difference between Bi-GRU-CRF with Naive-Bayes and Bi-LSTM-CRF with Naive-Bayes in terms of accuracy in disease prediction.

Scope and Limitations

The research study is focused on recognition of symptom-related entities in Filipino language text, and use the detected entities to produce a prediction of likely diseases. The Tagalog dialect will be the target dialect for the study. As disease information, such as names, can be scientific in nature and may sometimes not be translated, English or Latin words may be present in either the text input or the given result.

The study will predict only a certain number of diseases. The diseases to be predicted will be based on the amount of diseases that are available in Filipino-language-oriented health websites. As such, the symptoms will also be limited to the ones that are given in each disease. The websites that will be used as data sources are Filipino-language health websites such as “ritemed.com.ph” and “mediko.ph.“ The number of diseases to be predicted will also be influenced by the variety of diagnoses that health experts will provide from non-clinical Tagalog free-text data.

The disease prediction that will be given as the result of user input will not serve as definitive diagnoses, but rather to serve as a means of determining the likelihood that a particular set of symptoms may result in the given prediction. It will not serve as a

replacement for professional medical personnel, but to serve as auxiliary information that may benefit both users experiencing symptoms and also medical personnel.

The algorithms to be tested for accomplishing the NER process will be Bi-GRU-CRF and Bi-LSTM-CRF. These algorithms will be evaluated based on their accuracy through F-measure.

Significance of the Study

The Filipino-oriented model aims to increase the accuracy of NER in symptom recognition to be used in diagnosis and to create a symptom resource in the Filipino language. Hence, this study would be beneficial to the following sectors:

Healthcare Centers. Healthcare centers and medical clinics can utilize the disease prediction system as an initial symptom analysis for incoming patients. Determining the symptoms keywords that a patient currently experiences may potentially make consultation and queue times more efficient and faster for patients. The system can also be used as an alternative to teleconsultation services provided by healthcare centers.

Future Researchers. The result of this study can be used as a basis for future studies in natural language processing in the field of text mining, specifically as a resource for the Filipino language in the field of healthcare. The generated symptom corpus in the Filipino language from this paper also contributes to the diversity of already available corpora, which future researchers can utilize.

Operational Terms

Corpus – refers to the collection of written texts, particularly the complete works of a single author or a body of work on a single topic (Merriam-Webster, n.d.).

Named entity recognition – it refers to text classification into default categories, e.g., names, as a result of data extraction from plain text sentences (Techopedia, n.d.).

Text-processing – also known as text manipulation, particularly text transformation from one format to another (Techopedia, n.d.).

Filipino text – Words or sentences in the Filipino language. The Tagalog dialect will be focused on, specifically.

Free-text – Consists of sentence-form or paragraph-form statements.

Symptom – refers to the underlying – physical – evidence of a particular disease (Merriam-Webster, n.d.).

Symptom recognition – Determining which words in a sentence can be classified as symptom-related information.

Disease prediction – A type of system that takes medical information and returns one or more disease statuses based on the given information.

Chapter 2

REVIEW OF RELATED LITERATURE AND STUDIES

This chapter contains brief summaries of studies that are related to natural language processing and its utilization in the field of healthcare. The studies reviewed here were chosen as a means for justifying further exploration into the study's topic, and allow for insight into possible ways wherein the study could cement its own contributions to the topic itself.

The use of electronic health records as a resource for NLP

There have been many utilizations of natural language processing to analyze symptom information from existing electronic health records. Koleck et al. (2019) published a paper that reviews twenty-seven articles that accomplish this and taking into account the corpus used, the algorithms and methodology, and the results that were extracted. The majority of studies focused on symptom information and classifying the symptoms specified into a certain disease.

Currently, medical institutes employ electronic medical records (EMR) to keep track of a patient's status, including diagnostic data, operations done, and treatment outcomes. For large-scale analysis, EMR has been regarded as a valuable resource. EMR, on the other hand, includes properties such as variety, incompleteness, redundancy, and privacy that make direct data mining and analysis challenging. A group of researchers published a review article based in China utilizing the use of data processing and text mining, where data is collected from a patient's EMR, processed, which data is being cleansed then transformed for application (Sun et al., 2018).

EHRs are widely recognized as a significant source of data for a variety of secondary informatics use cases, including decision assistance, observational research, and business intelligence. EHRs may be able to overcome the financial constraints to produce adequate data for answering complicated topics that are out of reach for more traditional patient recruiting processes if they are handled properly. Jackson et al. (2017) proposed a project where they utilized the use of natural language processing in extracting severe mental illness from each symptom that is gathered from clinical texts.

NLP analysis methods in clinical text

With the continuous development of the World Wide Web, even the healthcare sector has seen tremendous usage of digital documents and websites in order to store health-related data and make it accessible to the common user.

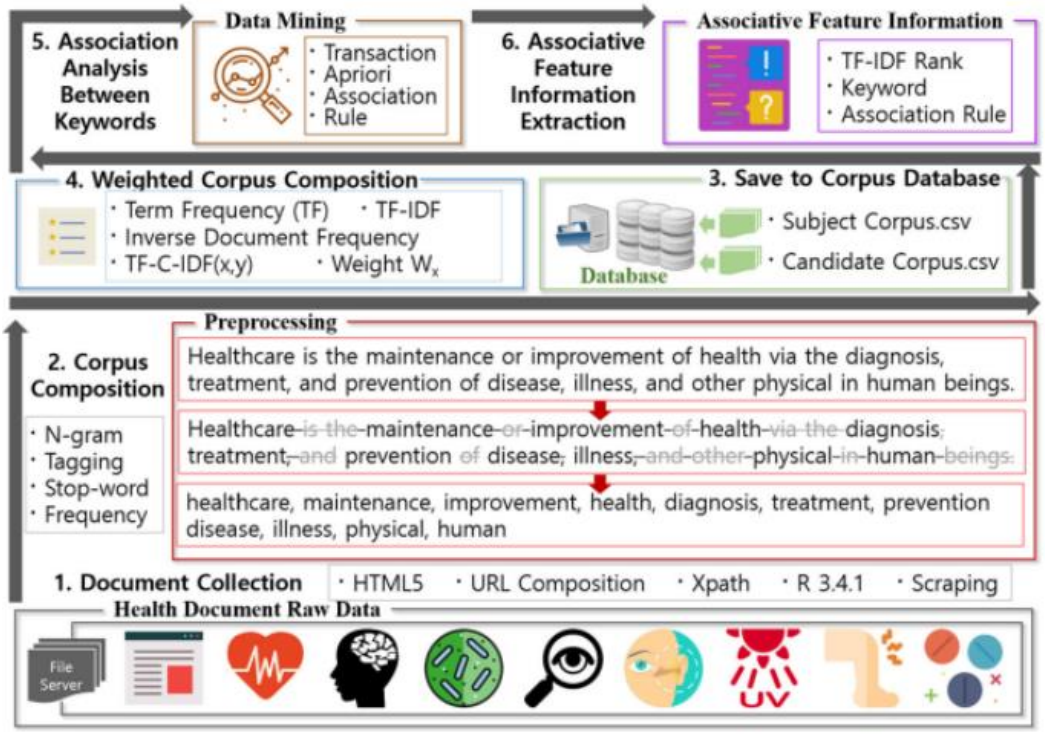

Figure 4. Diagram of associative feature information extraction

Two researchers utilized documents from big health companies and created a corpus of disease keywords and associations between each other (Kim & Chung, 2018). The researchers used the statistical measure term frequency-inverse document frequency (TF-IDF) in order to determine symptom keywords based on how frequent they appear in a given document. The Apriori algorithm is then used to determine what particular keywords (i.e. disease names) are closely related, or appear next to certain other keywords (such as disease information). The researchers hoped that this kind of corpus could add value and use to healthcare documents. This is a study that is an example of how to extract symptom-related information from a document, and shows the possibility of getting more information related to it through the manipulation of that keyword.

Big data from health companies have been used to create a Learning Health-care System (Kaggal et al., 2016). The rising amount of electronic health records from big companies paves the way for a "big data-empowered clinical NLP infrastructure" that allows for health analysis that has both delayed and real-time analysis capabilities. The results of the study showed that analysis of big data largely outperforms "data stage and standalone server" data, which are far less powerful systems. This demonstrates that although language processing through a simple layman system could still be useful, the use of NLP in powerful systems is undeniably more powerful.

It is not only physical symptoms that are able to be processed with a great degree of accuracy. There is a processing model available that allows for analysis of possible symptoms related to mental health disorders (Mulyana et al., 2019). It attempts to make a case-based reasoning system (CBR) that takes information from patients' account of their current symptoms, and the assessment of medical professionals regarding patient

behavior, and compares it to a corpus of mental disorders and their symptoms. The system that was developed notably associates certain keywords with specific categories of mental disorders. The accuracy of the model in regards to testing new patients was not stated in the paper.

Sometimes, in search engines, looking up symptoms may bring up articles that are loosely or not related to the symptoms themselves or the diseases that those symptoms are a part of. Researchers in Indonesia created a new form of search engine that uses 'semantic web' technology in order to "show relationships and synonyms between the data" (Amalia et al., 2018). A Resource Description Framework (RDF) serialization form was generated by scraping health websites, and analyzing associations between terms and storing them into the serialization. Again, utilizing this created framework through a system or application can test the significance and accuracy of the type of model created.

Some researchers made use of the Knowledge Discovery in Databases (KDD) process in data mining which consists of various processes such as data selection, data pattern searching, and knowledge representation, among others (Ali & Divya, 2020). Two methods of machine learning were used in the data mining process. In supervised learning, the system trains itself with the use of user inputs, while in unsupervised learning, hidden structures and relationships between datasets are discovered. The researchers made use of nine (9) algorithms that can be implemented in healthcare prediction, and different types of chronic diseases were the main focus and output of the prediction. The use of neural networks, which was used to predict heart and kidney diseases, obtained the highest accuracy rate of 97% if proper training is given by the datasets.

Text mining techniques can be used for predictive measures through semi-structured text. Cassim et al. (2021) were able to extract Gleason scores (GS) – prostate cancer (PCa) predictive information – from text-intensive patient reports. Narrative biopsy reports with PCa diagnosis were identified and evaluated using a text mining algorithm through morphology and topography codes. Procedural steps for the developed algorithm are: data acquisition, preprocessing, feature extraction, feature value representation, feature selection, information extraction, classification, and discovered knowledge. Recall and F-score were used for the precision evaluation of the algorithm. It was revealed to have accurately extracted GS from the biopsy reports and further discovered the capability of text mining in handling different types of report formats.

Such records have also been used to identify statuses of patients' diseases (Alemzadeh & Devarakonda, 2017). A 'cognitive system' was created to fulfill such a purpose, analyzing text from both free-text and structured text located in electronic health records. According to the paper, previous systems that perform similar disease status identification focused on structured data rather than free-text. The use of Support Vector Machines (SVMs), a form of supervised learning, was deemed the most efficient at analyzing such records. The dataset focused on patient records which were related to hypertension and related disorders. The system showed around 75% accuracy when testing on free-text data, 54% when testing purely on structured data. When combining models of both structured and unstructured data, there was an increase in training data, but no visible signs of increase in performance, maintaining 75% accuracy.

Regarding determining the accuracy of symptom checkers in diagnostic and triage, Semigran et al. (2015) conducted a study evaluating symptom checkers using clinical vignettes – a similar method used by health professionals for assessing diagnostic

abilities. These vignettes were divided into categories of triage urgency (emergent care, non-emergent care, and self-care sufficient) and diagnosis categories (common and uncommon diagnosis). From extensive filtering of available symptoms checkers online, only 23 qualified systems were selected. Upon testing, only 34% of the standardized patient data were correctly diagnosed, while 58% of the data were correctly listed in the top 20 provided diagnoses. Results imply that symptom checkers lack accuracy compared to health professionals' diagnoses.

Named entity recognition in clinical text

Another form of NLP analysis is through the use of NER to determine specific entities that can be found in clinical text. This section will focus specifically on the various NER methods that were utilized.

A combined dictionary-based approach was used to evaluate medical records (Quimbaya et. al. 2016). Specifically, it attempts to use exact comparison of words to determine whether or not a word can be categorized as a certain entity. Additionally, fuzzy recognition and stemmed recognition methods were added to serve in helping the model to make more informed decisions in entity categorization. The combined approach had improvements in recall; however, increases in recall had a negative impact in the precision score. The model also does not take into account the context of the sentences around a particular word.

To be able to consider the context of a given sentence, the use of recurrent neural networks (RNNs) in studies were utilized. One example is the use of LSTM to analyze medical records (Wu et. al., 2017). The study converted words in a Chinese medical

dataset and segmentation was accomplished due to Chinese word boundary rules. Each word was converted into a low-dimension vector and then individually processed. A layer of both LSTM and conditional random fields were utilized to classify each word. The implementation of LSTM was done by utilizing several different NLP tools. Individually, LSTM and CRF had an accuracy of 82.01% and 84.98%, respectively. Combining both methods resulted in around a 2% increase in accuracy.

Other similar algorithms were also utilized for NER in medical records. A model was tested that uses a method called Bidirectional Encoder Representation from Transformers (BERT) in order to pre-process data and convert it into word vectors. The main component of the model utilizes the pre-processed data from BERT and identifies entities through Gated Recurrent Units (GRUs) and CRFs. The study identified several entity types relating to medical information, such as symptoms, diseases, treatments and drugs. The model achieved a 90.38% F1 score, which, when compared to other models such as BiLSTM-CRF using the same dataset was significantly higher (Qin et al., 2021). The model also had a much faster training time than the other algorithms tested. The researchers conclude by stating possible further explorations of the data, such as mapping the associations between the different entities that were classified.

Disease prediction by utilizing medical data

A clinical support decision system was created to predict the existence of diabetes mellitus in patients using C4.5 and K-Nearest Neighbors (KNN) (Hashi et al., 2017). The study used an existing medical dataset of 788 samples of patients who have tested either positive or negative for diabetes. The dataset consisted of medical data obtained through tests such as glucose concentration and amount of insulin, as well as relevant information

about the patient such as age and BMI. The system achieved a 90.43% and 76.96% accuracy for C4.5 and KNN respectively.

Another disease prediction system focused on the prediction of heart diseases by using Naive-Bayes classification (Dulhare, 2018). The study used another medical dataset consisting of information regarding a patient's cardiovascular information such as maximum heart rate, cholesterol and chest pain experienced. The feature selection was made more efficient through the use of particle swarm optimization, and the data was classified according to the optimized features. The study achieved an 87.91% accuracy in predicting heart diseases for a particular patient.

Learning as a method to create healthcare applications

An example of text processing to provide an initial form of diagnosis is the creation of a text messaging-based diagnosis system (Omoregbe et al., 2020). The researchers implemented fuzzy logic to analyze user symptom input and determine the possible diseases that could be related to such symptoms. Tropical diseases that could be found in Nigeria were the focus of the study. An application programming interface (API) for Telegram, a social media messaging service, was used to facilitate the use of a chatbot for receiving communication from users and another API for sending text messages. The system received a mostly positive reception in terms of system usability, indicating that similar systems could also prove to have a purpose.

Diagnosis websites are simple and efficient for keeping track of one's health conditions, especially for people with existing medical records. Gupta et al. (2020) devised a web application that predicts health conditions from patients' previous records. Different

machine learning models were used to evaluate the patient's condition: heart disease, diabetes, or stroke. K-Nearest Neighbours (KNN), a supervised clustering algorithm, and Logistic Regression were applied to the preprocessed datasets for the three (3) different models. With the visualization feature of the web application, the patient's health status is easily monitored and understood.

A Hospitalization Application was developed by Indonesian researchers in 2016. The focus of their study was to make an application that would present hospital details, doctor details, and schedule of appointments of selected hospitals. It was achieved through the web scraping method using the PHP library – PHP Simple HTML Dom Parser – through HTML tags on selected hospital websites. They also made use of Rapid Application Development (RAD) for the development process wherein the model is built in repeated cycles before proceeding to testing and deployment. And although the web scraping causes errors and lost data, the objective of the paper was successfully achieved (Naswir et al., 2016).

NLP in low-resource languages and non-clinical text

There have been attempts to categorize possible approaches to creating language processing resources for languages with scarce data and systems (Hedderich et al., 2021; Magueresse et al., 2020). Methods such as data augmentation and cross-lingual annotation projections make use of high-resource languages and attempt to convert the information present into a format that can be utilized by low-resource languages. There has also been progress in the development of resources such as machine translation for certain low-resource languages, and also in informal languages such as those which can be found in websites such as social media (Lo et al., 2017).

Regarding the use of natural language processing in healthcare, the majority of the papers reviewed by Dreisbach et al. (2019) focus on analyzing data from clinical text; electronic health records that can be found in hospitals. However, work has also been done regarding processing health-related information from non-clinical text. Several studies were done regarding the utilization of language processing in mental health, where the data sources were taken from websites such as forums, blogs, and journals, and also social media websites such as Facebook or Twitter. Information such as the text, date of posts, and user behavior was extracted, in order to detect or predict a variety of mental health issues such as depression, suicidal thoughts, and other specific emotions (Calvo et al., 2017). Forms of specific diagnosis regarding mental health issues have been studied upon, but real-time diagnosis systems that respond to user input are “an understudied area.”

It is not only mental health where non-clinical text can be applied as a data source. Kushwaha and Kar (2021) created a system and framework that clusters posts that can be found in medical forums, that are related to cancer information and symptoms, and displays it in an interface that can be observed by users such as medical professionals. The framework can be modified to not just look for cancer-related posts, but also other diseases such as COVID-19.

The work of Baskaran et al. also utilized automated scraping of data from varying structured pages – Medical Discussion Forum websites – using semantic analysis. They used an Information Extraction (IR) system – automated crawling – to crawl on websites, spotting web pages possessing important data objects to be extracted and stored in structured form – i.e. CSV, JSON, and XML. Findings show that the accuracy of extracting

using semantic analysis is directly related to the scope of semantic rules (Baskaran & Ramanujam, 2018).

Synthesis of the Study

It is clear that there have been many ways that natural language processing has been utilized in order to accomplish an auxiliary function in the healthcare sector, from simple applications (Omoregbe et al., 2020, Kushwaha and Kar, 2021, Baskaran & Ramanujam, 2018) to big companies using large collections of data (Kim & Chung, 2018). Many of these projects have revealed the ability of text processing to assist in the sector and provide preliminary information that could then be analyzed by healthcare professionals. The accessibility of text processing can also be proved by the aforementioned small and simple applications, which could allow many independent entities to build upon this field. The amount of different text processing algorithms being used also prove the usefulness of text processing in a myriad of situations and datasets, such as the electronic health records and other medical-related datasets that were utilized.

While there have been many different approaches regarding the use of natural language processing in healthcare, many of these resources exist by utilizing the English language. As such, there is a wide range of data sources and methods that can be utilized by research, but only using English. This may pose restrictions on usage in other countries whose main language is not English. Further work is needed to develop tools and knowledge bases in low-resource languages (Hedderich et al., 2021; Magueresse et al., 2020).

Also, existing NER studies only focus on the creation of NER systems that classify medical entities in clinical health records (Wu et. al., 2017, Qin et al., 2021).

Current studies that predict medical information such as diseases also rely on datasets with information from medical text (Hashi et al., 2017, Naswir et al., 2016), and this information is presented already in a processed format and not in other forms of data such as unprocessed free-text.

The researchers will utilize the language resource gap, providing a method of analysis that will primarily utilize part of the Filipino languages, in order to have a disease prediction system that can benefit the local Filipino populace. The study will also explore possible utilizations of current health-related data analysis approaches such as NER and machine learning, in order to unify them in such a way that it may have possible use cases in text that is not found in clinical health records.

Chapter 3

METHODOLOGY

This chapter explains the methods that will be used to accomplish the objectives of the study. It details the data that will be utilized and how it will be processed in order to create a system that will answer the problems that were outlined in Chapter I.

Research Design

The researchers will utilize the experimental design for the study. An experimental design aims to manipulate and observe the effects that a study's variables have on each other. The proponents seek to manipulate an input field of text that contains symptom information and to analyze the accuracy of the results that the natural language processing model provides. The proponents will have control over the dataset and the models in an attempt to predict a particular output.

Sources of Data

To obtain data for disease prediction, the researchers will use data scraping in Filipino language health websites to obtain Filipino-oriented information regarding diseases, and symptom information. A dataset will be constructed where symptom descriptions will be assigned to particular diseases.

To obtain non-clinical free-text data for training of symptom recognition, the researchers will use questionnaires to obtain information from Filipino citizens who have experienced, or are experiencing, physical symptoms. The target diseases would be the

diseases that are contained in the dataset of disease classification from Filipino health websites. The free-text data will be manually annotated by the proponents using the IOB or BIO (Begin, Inside, Outside) format. B-*label* will determine appearances of words related to a particular label. I-*label* will determine label-related words that occur after words annotated with B. O-*label* will refer to words that are not related to the specified labels. Symptoms will be the entity to be labeled using this format. The annotations would be verified by health experts in order to justify its use in symptom recognition.

Sampling Technique

The researchers will use a non-probability sampling method – purposive sampling – for both Filipino health websites and respondents from crowdsourcing. This sampling method would potentially generate relevant and valuable information (Kelly, 2010) and is also practical for studies with limited resources, as it is used to specify and pick subjects (Palinkas et al., 2015).

The selected health websites should contain diseases and symptoms in the Filipino Language. And with the qualitative approach of data gathering through interview, the proponents can employ an equitably small and subjectively selected sample (Miles & Huberman, 1994) of respondents who are experiencing any symptoms to be interviewed.

System Architecture

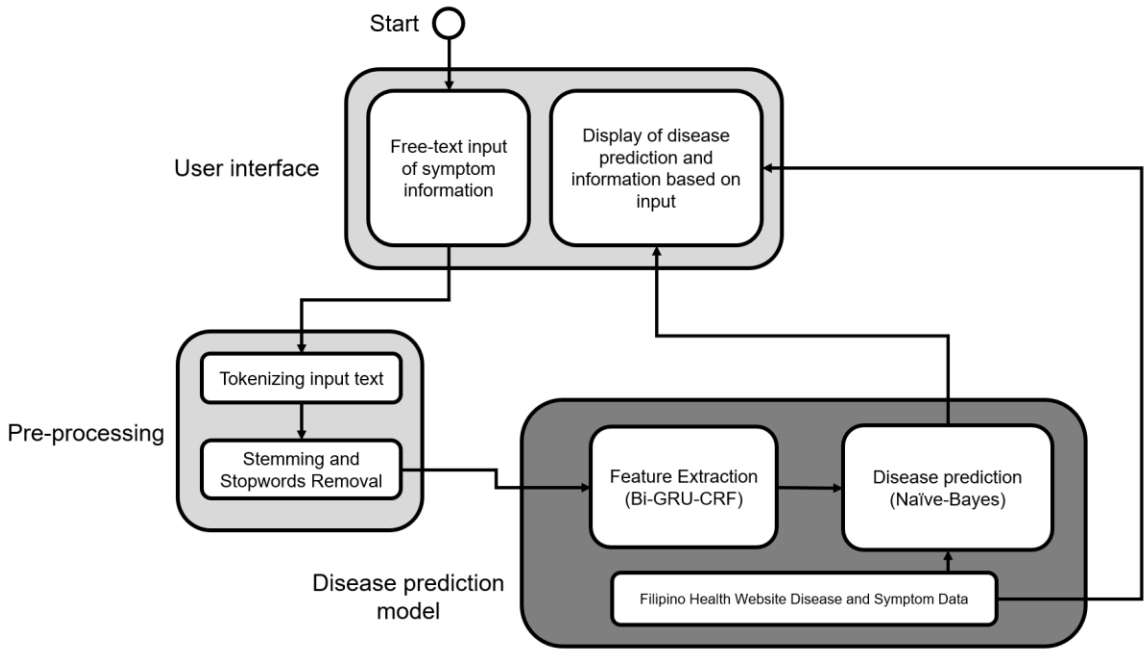

Figure 5. System Architecture

The study proposes a model that utilizes the feature extraction capabilities of named entity recognition algorithms in non-clinical Tagalog text and adds an additional prediction layer given the features that were extracted. In other words, the model would output the most likely diseases that could occur when given Tagalog sentences that include physical symptoms.

Each component of the system is as follows:

- **User interface -** This is considered to be the frontend of the system. This serves as an example method on how the model would be accessed by users such as incoming patients in hospitals, to be accomplished through a website interface. The user interface will consist of 2 ‘pages’:
    - **Input page:** This will contain a space to input sentences or paragraphs of Filipino text containing symptom information.

- **Results page:** The results of the model will be displayed here. Information such as detected symptoms, list of likely diseases and probability, and additional health information from Filipino health websites will be displayed.

- **Pre-processing -** In this component, several methods will be applied to prepare the data for analysis through the model.
  - **Tokenizing:** The model will need to analyze the sentences one word at a time, so each individual word in the input sentences will be separated into their own token.
  - **Stemming and Stopwords Removal:** Once there is an input text in place, the system will need to reduce Tagalog words to their basic form in order to have more accurate results. This procedure is called stemming. The system will utilize the TagSA stemming algorithm in order to accomplish this function. This algorithm was chosen due to it being one of the few resources regarding stemming functions in the Filipino language. It is an algorithm with accurate results, with under-stemming and over-stemming error percentages of “less than 15%” and “less than 0.005%,” respectively (Bonus, 2003).

    Stopwords removal will be accomplished through the use of a comprehensive collection of Tagalog stopwords (Diaz, 2016).

- **Disease prediction model:** This is the main function of the study. Its purpose is to perform the designated objectives of extraction of symptom information in Tagalog text, and to accomplish prediction of diseases from the extracted symptoms.

- **Feature extraction by using Named Entity Recognition (Bi-GRU-CRF):** To be able to recognize what words in a given Tagalog text are related to symptoms, the Bi-GRU-CRF NER algorithm must be utilized. This NER component of the model would also be bidirectional, in that it considers both the left-to-right and right-to-left versions when reading the input. The results of the GRU algorithm will pass through a CRF layer, which will analyze the tags that are assigned to nearby words in order to predict a more optimal classification. The addition of CRF to the NER process will result in a higher tagging accuracy (Huang et. al., 2015).

- **Disease prediction by using Naive-Bayesian text classification:** The layer of disease prediction will utilize Naive-Bayes in order to determine the likely diseases that could arise from the extracted symptoms in non-clinical Filipino text.

- **Filipino health website disease and symptom data:** In order to determine the features to be used for disease prediction, a dataset of diseases and associated symptom features will be utilized. Because the study deals with Tagalog non-clinical text, the dataset will consist of Tagalog disease information along with a list of accompanying symptoms. This data will be retrieved from Filipino-language health websites.

Table 1 describes a sample of the structure to be used in disease prediction. For each disease specified in a Filipino website, information in the symptoms section for the particular disease will be added as a feature. Each symptom is assigned to every disease in the dataset and assigned a score of 1 or 0, depending on if the symptom will appear in a particular disease. This will be used to compare with the extracted symptom features, which are expected to be between 1 and 0 to account for inexact matches of symptom phrases.

Disease Name	**Symptoms**
Fever	sakit_ulo, hilo, depresyon, suka, hirap_isip, …
Headache	pagod, sakit_katawan, hilo, suka, …
Pneumonia	ubo, plema, lagnat, nginig, sakit_dibdib, …
…	

Table 1. Disease Map, taken from RiteMed website data.

The model will implement the specified algorithms and compare the results against other learning algorithms. Because the result of disease prediction will depend on the symptom entities extracted, the NER process will be evaluated by comparing it to an existing NER approach. The accuracy of the Bi-GRU-CRF algorithm will be compared against Bi-LSTM-CRF.

Instrument

The following are the tools and devices that are to be used to fulfill the objectives of the research:

- **Computer devices:** Desktops, laptops and phones are necessary for the gathering of information about the topic, and for the creation of the system for analysis.

- **Web scraping method:** To be able to extract data from the sources, a text mining library will be utilized in order to retrieve and store information in a convenient manner. The NLTK library, built in Python will be considered for the study. This will consist of built-in functions and systems that will perform data gathering without the need to create code from scratch. Text mining will be utilized to gather Tagalog health information to allow for a basis for disease prediction by gathering lists of diseases and symptoms associated with the particular diseases.

- **Experiment Paper:** The experiment paper will be used in writing patient responses during interviews. The questions to be asked in the interviews are validated by a physician (expert in the field) to get the needed answers from patients – symptom information. This experiment paper with patient responses will also be annotated by the expert, recognizing the symptom information and making a diagnosis from it.

The other experiment paper will be used in evaluation of the system in accordance with the statement of the problem. This will include the tallying and computing with the given formula for the statistical treatment.

Software Development

The study will utilize the Agile software development life cycle method as a basis for the structure of the creation of the system. The Agile set of software development methods refers to a type of software development that focuses on modular development, adaptability and a collaborative working style (Abrahammson et al., 2017). Agile consists of the following steps:

Figure 6. Agile Methodology (Nvisia Learn, 2020)

1. **Requirements Analysis -** Determining the part of the overall system that the component will address. This step concerns the orientation of the purpose of the particular component to be developed.
2. **Design -** In this step, the particular methods and classes that will be used to fulfill the requirements will be modeled. The programming languages to be used will also be defined here.
3. **Coding -** The designed methods and classes from the previous step will be implemented using the specified languages and tools.
4. **Testing -** The component will be put through unit tests to ensure each use case of the system works as intended.
5. **Maintenance -** Any unintended bugs in the system will be ironed out as they are discovered.

These steps are utilized to accomplish a component of a system, and is then repeated for other components in the system. This particular method was used to have an incremental form of progress for the study, and also because the components of the study

can be divided into several components: the user interface, the web scraping algorithm, the NLP analysis interface and the translation and searching interface.

Python will be utilized as the main programming language for analysis as it has many powerful tools to assist in the fulfillment of the objectives of the study. The data scraping functions and the construction of the model will be utilized using various libraries such as NLTK.

Data Generation Procedure

Data generation will start from getting data from two data sources: health websites and respondents. The researchers will gather data of symptom information from selected respondents by means of an interview, writing down their responses using an experiment paper. These responses will be evaluated by an expert, recognizing the symptom information and making a diagnosis from it, which will be the basis for evaluating the accuracy of the system.

Step 1. The researchers will ask for an interview with experts from a local hospital. Interviews would include validating and consulting the list of questions to be asked to the respondents. This would guarantee that interviews with the respondent will produce appropriate and useful information for the study while considering ethical principles.

Step 2. The researchers will look for respondents through crowdsourcing. Respondents who are experiencing any symptoms and are willing to participate in the study will be interviewed by the researchers.

Step 3. With the accumulated responses from the interviews, the researchers will then request another interview with the experts as they will identify the symptom information from the responses. They will also make their diagnosis if it lies within their field of expertise which will be used to evaluate the overall performance of the system.

Step 4. The researchers will also utilize a web scraping tool to gather symptom data from selected Filipino health websites. The data to be scraped are pages containing disease information and the symptoms associated with the diseases.

Step 5. To boost the usability of the data gathered using web scraping, the researchers will manually clean the data appropriate to the study. The words will be transformed into root words to match the process of NER. The researchers will also align the diseases to their respective number of symptoms.

Step 6. After collecting the dataset, the researchers can now proceed to model training. For training both models, Bi-GRU-CRF with Naive-Bayes and Bi-LSTM-CRF with Naive-Bayes, they will be fed with the same dataset, which is 70% of the collected data from the interview.

Step 7. The models will be tested using the remaining 30% of the dataset. The generated output will be tallied by the researchers using an experiment paper and will be applied to the statistical treatment to assess the performance of the system. A corpus containing diseases and symptom information will also be generated.

Statistical Data Analysis

In deep learning and machine learning, the most commonly used methods of analysis are the concepts of precision, recall, and the F1 score (Tjong et al., 2003, Vijayarani & Dhayanand, 2015). In dealing with statistical data using methods including precision, recall, and F1 score, variables such as the true positive (TP), true negative (TN), false positive (FP), and false negative (FN) will be required. An outcome is determined to be a true positive when the model correctly predicts the positive class, while a false positive is the positive outcome that the model incorrectly predicted. A true negative is a negative outcome that the model correctly predicted, whereas the negative outcome that the model incorrectly predicted is a false negative (Liang, 2020). These methods will be

used as the statistical treatment of data and for evaluating the accuracy of the system in tagging the correct Tagalog words as symptoms.

Precision

Precision tackles the exactness in classification of the entities that are recognized. The precision is the ratio of the true positive to the total predicted positive. A high precision implies a low false-positive rate or low number of misidentified symptoms – any precision value above the given threshold (0.5) is good for the model.

$$Precision = \frac{True\ Positive}{True\ Positive + False\ Positive}$$

Wherein:

TP = Number of correctly recognized symptoms/predicted diseases

FP = Number of wrong recognized symptoms/predicted diseases

TP + FP= Total number of symptoms/diseases

Recall

Recall tackles the number of names that appear in the exact spots in multiple predictions. The recall is the ratio of the true positive to the total actual positive. A high recall implies a low number of identified symptoms or predicted diseases – any recall value above the given threshold (0.5) is good for the model.

$$Recall = \frac{True\ Positive}{True\ Positive + False\ Negative}$$

Wherein:

TP = Number of correctly recognized symptoms/predicted diseases

FN = Number of failed symptom recognition/disease prediction

TP + FN = Total number of recognition/predictions

F1 Score

The precision and recall are averaged through harmonic mean to determine the F1 score as the systems' accuracy metric.

$$F1 = 2 \times \frac{Precision * Recall}{Precision + Recall}$$

As for the comparison of Bi-GRU-CRF with Naive-Bayes (Model 1) and Bi-LSTM-CRF with Naive-Bayes (Model 2) in terms of accuracy in disease prediction, the researchers will use the McNemar's Test since it can measure the predictive accuracy of two models. Sometimes referred to as "within-subjects chi-squared test," this test can be applied to classifier comparisons wherein the null hypothesis states that both models have the same performance, while the alternative hypothesis states that the models' performance are not equal. Rejection of hypothesis will be based on a significance level of 5% with one degree of freedom.

McNemar's Test

$$x^2 = \frac{(|b - c| - 1)^2}{(b + c)}$$

Wherein:

b = Number of correct predictions of model 1 that model 2 failed to predict

c = Number of correct predictions of model 2 that model 1 failed to predict

Ethical Considerations

As part of research ethics to protect the research participants' rights, improve research validity, and sustain scientific integrity, the proponents will pass an ethical clearance of the study subject to approval. It would contain the research proposal together with the questionnaire, and the proponent will adhere to the following principles:

Voluntary participation, wherein the participants have the freedom to take part and continue or withdraw anytime. There will be no negative consequences or pressure as the proponents respect their decisions.

Informed consent, wherein the proponents will explain in detail the purpose, benefits, and risks of the study that would help them decide whether or not to participate.

Anonymity, wherein the proponent will only collect data regarding symptom information and will not include any personally identifiable data in the creation of the model.

Confidentiality, wherein data regarding the participant will be kept confidential with strict adherence to their right to privacy. Only needed data will be used for the study.

Potential for harm: The proponents would only conduct interviews in a safe and isolated location (virtual or in-person) to alleviate physical and social harm. For psychological harm, the questions to be asked in the interview will be validated by an expert who filters safe, insensitive, and nontraumatic questions. The analysis dataset to be used for disease prediction will also be validated by an expert to ensure the validity of the symptoms being assigned to a particular disease.

Results communication, wherein recognition of other authors is practiced through proper citation, and data integrity is kept. The proponent will remain honest as a means to avoid plagiarism and research misconduct.

References

Abrahamsson, P., Salo, O., Ronkainen, J., & Warsta, J. (2017, September 25). Agile Software Development Methods: Review and Analysis. 10.48550/arXiv.1709.08439

Alemzadeh, H., & Devarakonda, M. (2017). An NLP-based cognitive system for disease status identification in electronic health records. In *2017 IEEE EMBS International Conference on Biomedical and Health Informatics, BHI 2017* (pp. 89-92). Institute of Electrical and Electronics Engineers Inc. 10.1109/BHI.2017.7897212

Ali, N. S., & Divya, G. (2020, January 2). Prediction of Diseases in Smart Health Care System using Machine Learning. *International Journal of Recent Technology and Engineering*, *8*(5). 10.35940/ijrte.E6482.018520

Amalia, A., Afifa, R. M., & Herriyance, H. (2018). Resource Description Framework Generation for Tropical Disease Using Web Scraping. *2018 IEEE International Conference on Communication, Networks and Satellite (Comnetsat)*, 44-48. 10.1109/COMNETSAT.2018.8684030.

Baskaran, U., & Ramanujam, K. (2018, January 23). Automated scraping of structured data records from health discussion forums using semantic analysis. *Informatics in Medicine Unlocked*, *10*, 149-158. 10.1016/J.IMU.2018.01.003

Bender, E. M. (2019, September 14). *The #BenderRule: On Naming the Languages We Study and Why It Matters*. The Gradient. Retrieved May 24, 2022, from https://thegradient.pub/the-benderrule-on-naming-the-languages-we-study-and-why-it-matters/

Bonus, D. E. J. (2003). The Tagalog Stemming Algorithm (TagSA). In *the Proceedings of the Natural Language Processing Research Symposium*. DLSU, Manila.

Calvo, R. A., Milne, D. N., Hussain, M. S., & Christensen, H. (2017, January 30). Natural language processing in mental health applications using non-clinical texts. *Natural Language Engineering*, *23*(5), 649-685. 10.1017/S1351324916000383

Chung, J., Gulcehre, C., Cho, K., and Bengio, Y. (2014). Empirical evaluation of gated recurrent neuronal networks on sequence modeling, Neuronal and Evolutionary Computing, 1412. arXiv [Preprint]. arXiv:1412.3555.

Campbell, D. A., & Johnson, S. B. (2001, February). Comparing Syntactic Complexity in Medical and non-Medical Corpora. *Proceedings / AMIA ... Annual Symposium. AMIA Symposium*, *90*(4). https://www.researchgate.net/publication/11535445_Comparing_Syntactic_Complexity_in_Medical_and_non-Medical_Corpora

Cassim, N., Mapundu, M., Olago, V., Celik, T., George, J. A., & Glencross, D. K. (2021, November 25). Using text mining techniques to extract prostate cancer predictive information (Gleason score) from semi-structured narrative laboratory reports in the Gauteng province, South Africa. *BMC Medical Informatics and Decision Making*, *21*(330). 10.1186/s12911-021-01697-2

Chawla, J. S. (2017, October 30). *Word Vectorization (TFIDF/Word2Vec) | by Japneet Singh Chawla | Medium*. Japneet Singh Chawla. Retrieved May 13, 2022, from https://thedatasingh.medium.com/introduction-713b3d976323

Cho, K., van Merrienboer, B., Gulcehre, C., Bahdanau, D., Bougares, F., Schwenk, H., et al. (2014). Learning phrase representation using RNN encoder-decoder for machine translation, Computation and Language, 1406. arXiv [Preprint]. arXiv:1406.1078.

Diaz, G. (2016, October 8). *Stopwords Tagalog (TL)*. GitHub. Retrieved June 29, 2022, from https://github.com/stopwords-iso/stopwords-tl

Dong, C., Zhang1, J., Zong1, C., Hattori2, M., & Di, H. (n.d.). Character-Based LSTM-CRF with Radical-Level Features for Chinese Named Entity Recognition. *Lecture Notes in Computer Science*, 239–250. 10.1007/978-3-319-50496-4_20

Dreisbach, C., Koleck, T. A., Bourne, P. E., & Bakken, S. (2019, May). A systematic review of natural language processing and text mining of symptoms from electronic patient-authored text data. *International Journal of Medical Informatics*, *125*, 37-46. 10.1016/j.ijmedinf.2019.02.008

Dulhare, U. N. (2018). Prediction system for heart disease using Naive Bayes and particle swarm optimization. Biomedical Research, 29(12), 2646-2649.

Gruber, N., & Jockisch, A. (2020). Are GRU cells more specific and LSTM cells more sensitive in motive classification of text?. Frontiers in artificial intelligence, 3, 40.

Gupta, V., Pant, M., Chauhan, M., Raj, K., & Kumar, V. (2020). Health Advisory System. *International Journal of Computer Science and Information Technology Research*, *8*(2), 33-36. https://www.researchpublish.com/papers/health-advisory-system

Hashi, E. K., Zaman, M. S. U., & Hasan, M. R. (2017, February). An expert clinical decision support system to predict disease using classification techniques. In 2017 International conference on electrical, computer and communication engineering (ECCE) (pp. 396-400). IEEE.

Hedderich, M. A., Lange, L., Adel, H., Strötgen, J., & Klakow, D. (2021, June). A Survey on Recent Approaches for Natural Language Processing in Low-Resource Scenarios. *Proceedings of the 2021 Conference of the North American Chapter of the Association for Computational Linguistics: Human Language Technologies*, 2545–2568. 10.48550/arXiv.2010.12309

Hegland, M. (2007). The Apriori Algorithm — A Tutorial. In *Mathematics and Computation in Imaging Science and Text Processing* (pp. 209-262). World Scientific Publishing Co. Pte. Ltd. 5 Toh Tuck Link, Singapore 596224 USA office: 27 Warren Street,

Suite 401-402, Hackensack, NJ 07601 UK office: 57 Shelton Street, Covent Garden, London WC2H 9HE. https://epdf.tips/mathematics-and-computation-in-imaging-science-and-information-processing20158.html

Huang, Z., Xu, W., & Yu, K. (2015). Bidirectional LSTM-CRF models for sequence tagging. arXiv preprint arXiv:1508.01991.

Institute of Medicine (US) Committee on Data Standards for Patient Safety. Key Capabilities of an Electronic Health Record System: Letter Report. Washington, DC: National Academies Press. 2003.

Jackson, R. G., Patel, R., Jayatilleke, N., Kolliakou, A., Ball, M., Gorrell, G., Roberts, A., Dobson, R., & Stewart, R. (2017). Natural language processing to extract symptoms of severe mental illness from clinical text: the Clinical Record Interactive Search Comprehensive Data Extraction (CRIS-CODE) project. *BMJ Open 2017*, *7*(1), e012012. 10.1136/ bmjopen-2016-012012

Kaggal, V. C., Elayavilli, R. K., Mehrabi, S., Pankratz, J. J., Sohn, S., Wang, Y., Li, D., Rastegar, M. M., Murphy, S. P., Ross, J. L., Chaudhry, R., Buntrock, J. D., & Liu, H. (2016, June 23). Toward a Learning Health-care System - Knowledge Delivery at the Point of Care Empowered by Big Data and NLP. *Biomedical Informatics Insights*, *8*(s1), 13-22. 10.4137/bii.s37977

Kelly, S. E. (2010). Qualitative Interviewing Techniques and Styles. In *The SAGE Handbook of Qualitative Methods in Health Research*. Thousand Oaks: Sage Publications. 10.4135/9781446268247.n17

Kim, J.-C., & Chung, K. (2018, March 1). Associative Feature Information Extraction Using Text Mining from Health Big Data. *Wireless Personal Communications*, *105*(2), 691-707. 0.1007/S11277-018-5722-5

Koleck, T. A., Dreisbach, C., Bourne, P. E., & Bakken, S. (2019). Natural language processing of symptoms documented in free-text narratives of electronic health

records: a systematic review. Journal of the American Medical Informatics Association, 26(4), 364-379.

Krotov, V., & Tennyson, M. (n.d.). Research Note: Scraping Financial Data from the Web Using the R Language. *Journal of Emerging Technologies in Accounting*, *15*, 169-181. 10.17705/3jmwa.000066

Kushwaha, A. K., & Kar, A. K. (2021, February). Information Labelling of Medical Forum Posts by Non-Clinical Text Information Retrieval. *CEUR Workshop Proceedings (CEUR-WS.org)*, *2786*, 499-510.

Lample, G., Ballesteros, M., Subramanian, S., Kawakami, K., & Dyer, C. (2016). Neural architectures for named entity recognition. arXiv preprint arXiv:1603.01360

Liang, F. (2020, April 18). *Evaluating the Performance of Machine Learning Models | by Frank Liang*. Towards Data Science. Retrieved June 19, 2022, from https://towardsdatascience.com/classifying-model-outcomes-true-false-positives-negatives-177c1e702810

Liddy, E. D. (2001). Natural Language Processing. In *Encyclopedia of Library and Information Science* (2nd ed.). New York: Marcel Decker, Inc. https://surface.syr.edu/istpub/63/

Lo, S. L., Cambria, E., Chiong, R., & Cornforth, D. (2017). Multilingual sentiment analysis: from formal to informal and scarce resource languages. *48*, 499-527. 10.1007/s10462-016-9508-4

Magueresse, A., Carles, V., & Heetderks, E. (2020, June 12). Low-resource Languages: A Review of Past Work and Future Challenges. 10.48550/arXiv.2006.07264

Meyer AND, Giardina TD, Spitzmueller C, Shahid U, Scott TMT, Singh H Patient Perspectives on the Usefulness of an Artificial Intelligence–Assisted Symptom Checker: Cross-Sectional Survey Study J Med Internet Res 2020;22(1):e14679

Merriam-Webster. (n.d.). Symptom. In *Merriam-Webster.com dictionary*. Retrieved May 13, 2022, from https://www.merriam-webster.com/dictionary/symptom

Merriam-Webster. (2022). Corpus. In *Merriam-Webster.com dictionary*. Retrieved May 13, 2022, from https://www.merriam-webster.com/dictionary/corpus

Miles, M. B., & Huberman, A. M. (1994). *Qualitative data analysis: An expanded sourcebook* (2nd ed.). Thousand Oaks, CA: Sage Publications. https://www.scirp.org/(S(vtj3fa45qm1ean45vvffcz55))/reference/ReferencesPapers.aspx?ReferenceID=1423956

Mohit, B. (2014). Named Entity Recognition. In *Natural Language Processing of Semitic Languages. Theory and Applications of Natural Language Processing* (pp. 221–245). Springer, Berlin, Heidelberg. 10.1007/978-3-642-45358-8_7

Mulyana, S., Hartati, S., Wardoyo, R., & Subandi. (2019, October). A Processing Model Using Natural Language Processing (NLP) For Narrative Text Of Medical Record For Producing Symptoms Of Mental Disorders. *2019 Fourth International Conference on Informatics and Computing (ICIC)*. 10.1109/ICIC47613.2019.8985862

Naswir, A. F., Ginanjar, R., Wahyu, R. B., Hasrito, E. S., Wahyu, Y., & Sulityo, B. (2016, October 29). Hospital Information (Hospitalization) Application Using Web Scraping Method. *Proceeding Seminar Nasional APTIKOM 2016*, *1*(1). https://journal.universitasbumigora.ac.id/index.php/semnastikom2016/article/view/189

Nvisia Learn. (2020, September 16). *What is Agile Methodology? Benefits of using Agile*. nvisia. Retrieved June 29, 2022, from https://www.nvisia.com/insights/agile-methodology

Omoregbe, N. A., Ndaman, I. O., Misra, S., Abayomi-All, O. O., & Damaševičius, R. (2020, September 29). Text Messaging-Based Medical Diagnosis Using Natural

Language Processing and Fuzzy Logic. *Journal of Healthcare Engineering*, *2020*, 1-14. 10.1155/2020/8839524

Palinkas, L. A., Horwitz, S. M., Green, C. A., Wisdom, J. P., Duan, N., & Hoagwood, K. (2015, September). Purposeful Sampling for Qualitative Data Collection and Analysis in Mixed Method Implementation Research. *42*(5), 533-44. 10.1007/s10488-013-0528-y

Perez, M. (2020, May 11). *Web Scraping Definition: What it is and how it works*. ParseHub. Retrieved May 13, 2022, from https://www.parsehub.com/blog/web-scraping-definition/

Putra, F. K. B. *. S. *. P. N. B. B., Yusuf, A. A., Yulianus, H., Pratama, Y. P., Humairra, D. S., Erifani, U., & Dwi. (2019). Identification of Symptoms Based on Natural Language Processing (NLP) for Disease Diagnosis Based on International Classification of Diseases and Related Health Problems (ICD-11). *2019 International Electronics Symposium (IES)*, 1-5. 10.1109/ELECSYM.2019.8901644

Qin, Q., Zhao, S., & Liu, C. (2021). A BERT-BiGRU-CRF model for entity recognition of Chinese electronic medical records. Complexity, 2021.

Quimbaya, A. P., Múnera, A. S., Rivera, R. A. G., Rodríguez, J. C. D., Velandia, O. M. M., Peña, A. A. G., & Labbé, C. (2016). Named entity recognition over electronic health records through a combined dictionary-based approach. Procedia Computer Science, 100, 55-61.

Schmidhuber, J. (2021). *The 2010s: Our Decade of Deep Learning / Outlook on the 2020s*. SUPSI - Dalle Molle Institute for Artificial Intelligence - People. Retrieved June 29, 2022, from https://people.idsia.ch/~juergen/2010s-our-decade-of-deep-learning.html

Semigran, H. L., Linder, J. A., Gidengil, C., & Mehrotra, A. (2015, July 8). Evaluation of symptom checkers for self diagnosis and triage: audit study. *BMJ*, *h3480*. 10.1136/bmj.h3480

Sun, W., Cai, Z., Li, Y., Liu, F., Fang, S., & Wang, G. (2018, April 8). Data Processing and Text Mining Technologies on Electronic Medical Records: A Review (I. G. Tollis, Ed.). *Journal of Healthcare Engineering*, *2018*, 1-9. 10.1155/2018/4302425

Sutton, R. T., Pincock, D., Baumgart, D. C., Sadowski, D. C., Fedorak, R. N., & Kroeker, K. I. (2020, February). An overview of clinical decision support systems: benefits, risks, and strategies for success. *Artificial Intelligence and Clinical Decision Support*, *3*(1), 1-10. 10.1038/s41746-020-0221-y

Techopedia. (n.d.). *What is Named-Entity Recognition (NER)? - Definition from Techopedia*. Techopedia. Retrieved June 19, 2022, from https://www.techopedia.com/definition/13825/named-entity-recognition-ner

Techopedia. (n.d.). *What is Text Processing? - Definition from Techopedia*. Techopedia. Retrieved May 13, 2022, from https://www.techopedia.com/definition/22541/text-processing

Tjong, E. F., Sang, K., & De Meulder, F. (2003, June 12). Introduction to the CoNLL-2003 Shared Task: Language-Independent Named Entity Recognition. 10.48550/arXiv.cs/0306050

Vijayarani, S., & Dhayanand, S. (2015). Liver disease prediction using SVM and Naïve Bayes algorithms. International Journal of Science, Engineering and Technology Research (IJSETR), 4(4), 816-820.

Wasylewicz, A.T.M., & Scheepers-Hoek, A.-M. J.W. (2019, January). Clinical Decision Support Systems. *Fundamentals of Clinical Data Science*, 153-169. 10.1007/978-3-319-99713-1_11

Wu, J., Hu, X., Zhao, R., Ren, F., & Hu, M. (2017). Clinical named entity recognition via bi-directional LSTM-CRF model. In CEUR Workshop Proc (Vol. 1976, pp. 31-6).

Appendix

Appendix 1: Curriculum Vitae

Cabana, Lance Chrysler M.

014 Burgos Street, Barangay 5
Baler, Aurora 3200

Phone: 09497174923
lancecabana@gmail.com

EDUCATION

Grade School
Suklayin Elementary School — 2006-2013
Baler, Aurora

Junior High School
Aurora National Science High School — 2013-2017
Baler, Aurora

Senior High School
Aurora National Science High School — 2013-2019
Baler, Aurora
STEM

HONORS AND AWARDS

Graduated with Honors — 2013

Graduated with Honors — 2017

Graduated with Honors — 2019

LANGUAGES

Filipino: Native Language

English: Intermediate Listener, Novice Speaker, Advanced Reading and Writing

COMPUTER SKILLS

High-level Programming: C, C++, Java

Dingcon, Miguelle Edrienne A.

Phone: 09155685842
edriennedingcon12@gmail.com

924 Norma St., Brgy. 565
Sampaloc, Manila, Metro Manila

EDUCATION

Grade School
Gen. Miguel Malvar Elementary School — 2006-2013
Sta. Mesa, Manila

High School
Antonio A. Maceda Integrated School — 2013-2017
Sta. Mesa, Manila

Senior High School
Polytechnic University of the Philippines — 2017-2019
Sta. Mesa, Manila
STEM

HONORS AND AWARDS

Graduated with Honors — 2013

Graduated with Honors — 2017

Graduated with Honors — 2019

LANGUAGES

Filipino: Native Language

English: Intermediate Listener, Novice Speaker, Advanced Reading and Writing

COMPUTER SKILLS

High-level Programming: Experience in C, C++, Java

Mendinueta, Christian Jay M.

Phone: (02) 8288-4625
mendinueta.christianjay.pup@gmail.com

BLK 36 LOT 16 P2 A2 Maya-Maya St.
BRGY. NBBS Dagat-Dagatan,
Navotas City, Metropolitan Manila 1413

EDUCATION

Senior High School
Polytechnic University of the Philippines — 2017-2019
Sta. Mesa, Manila
TVLT-ICTS

Junior High School
Governor Andres Pascual College — 2013-2017
San Jose, Navotas

Grade School
Ninoy Aquino Elementary School — 2010-2013
Longos, Malabon
Westminster High School — 2007-2010
Tondo, Manila

HONORS AND AWARDS

Graduated with Honors — 2017

Academic Excellence — 2017

LANGUAGES

Filipino: Native Language

English: Intermediate Listener, Novice Speaker, Novice Reading and Writing

COMPUTER SKILLS

Programming: Experiences in C, C++, C#, Java

Applications: Experience in MySQL DMS

Soriño, Isaac S.

Phone: 09171478445
isaacsorino122@gmail.com

Blk 92 L3 Ginseng Rd. Robinsons Homes East
Brgy. San Jose, Antipolo City, Rizal

EDUCATION

Grade School
Our Lady of Peace School — 2006-2013
Antipolo City, Rizal

High School
Our Lady of Peace School — 2013-2017
Antipolo City, Rizal

Senior High School
Polytechnic University of the Philippines — 2017-2019
Sta. Mesa, Manila
STEM

HONORS AND AWARDS

Graduated with Honors — 2013

Graduated with High Honors — 2019

LANGUAGES

Filipino: Native Language

English: Intermediate Listener, Novice Speaker, Advanced Reading and Writing

COMPUTER SKILLS

High-level Programming: Experience in languages such as C, C++, Java, Python, database management in SQLite

Game Development: Has accomplished work on user modifications on video games such as Warcraft III, Minecraft

Appendix 2: Questionnaire

Information

Appendix 2 contains a tentative list of questions that are unverified by an expert for the purpose of collecting symptom information in Tagalog.

Material

APPLICATION OF NAMED ENTITY RECOGNITION IN DISEASE PREDICTION THROUGH SYMPTOM RECOGNITION IN NON-CLINICAL FILIPINO FREE-TEXT

Bilang bahagi ng aming pananaliksik patungkol sa ‘online preliminary consultation’ na aming ginagawa, kami ay nagsasagawa ng medikal na pagtataya sa pamamagitan ng isang sarbey patungkol sa inyong naging mga karanasan sa pagkonsulta, mga sintomas na naramdaman, at pati na rin kung saang parte ng inyong katawan kayo nakakaranas nito. Kami ay humihiling na inyong ibigay ang inyong tapat na pagsagot sa mga tanong na aming hinihingi. *(As part of our research about online preliminary consultations the researchers made, we are conducting a medical evaluation through a survey about your experiences with consultations, general symptoms, and symptoms related specifically to parts of your body. We are requesting you to give your honest assessment about the questions stated below by writing all the information needed.)*

Pangalan (Name) [Opsyonal (Optional)]:

Edad (Age):

Kasarian (Sex):

Pangkalahatang Instruksyon: Kami ay humihiling na hingin ang inyong naging mga karanasan sa pagkonsulta, mga sintomas na naramdaman, at pati na rin kung saang parte ng inyong katawan kayo nakakaranas nito. Kaming mga mananaliksik ang nagtalaga ng espasyo para inyong sulatan sa ibaba. *(You are requested to evaluate your experiences with consultations, general symptoms, and body part specific symptoms. The researchers provided spaces for you to write your honest assessment below.)*

Ilarawan ang mga sintomas na iyong nararanasan o naranasan. (*Describe the symptoms you have been experiencing or have experienced.*)

Kailan mo unang naranasan ang mga sintomas na ito? (*When did you first experience these symptoms?*)

Tukuyin ang iyong mga nararamdamang sintomas tungkol sa mga sumusunod [Maglagay ng N/A kung walang nararamdamang sintomas sa parte ng katawang iyon]: (*Specify your symptoms concerning the following [Put N/A if there's no symptoms]:*)

Ulo (*Head*):

Mukha (*Face*):

Tainga (*Ears*):

Mata (*Eyes*):

Ilong (*Nose*):

Bibig at Lalamunan (*Mouth & Throat*):

Leeg at Batok (*Neck & Nape*):

Balikat at Braso (*Shoulders & Arms*):

Kamay (*Hands*):

Balat (*Skin*):

Dibdib (*Chest*):

Likod (*Back*):

Tiyan (*Stomach area*):

Balakang (*Hip*):

Private area:

Hita at Binti (*Thighs & Legs*):

Paa (*Feet*):

Kalamnan at Kasukasuan (*Muscles & Joints*):

Appendix 3: Experiment Paper

Experiment Paper A

Objective:

To determine the precision, recall, and f1 score of the system in recognizing symptoms using the named entity recognition component of the model.

Materials:

A. Desktop/Laptop

B. Experiment Paper

C. Microsoft Excel

Procedure:

1. Enter the free-text responses of the respondents (test data) containing symptom information to the system.
2. Check if the symptoms were recognized based on the manually annotated training data.
3. Tally the results according to true positive, false positive and false negative.
4. Repeat steps 1-3 for all test data.
5. After feeding the test data, compute the precision, recall, and f1 score.

Experiment Paper A							
		Bi-GRU-CRF			Bi-LSTM-CRF		
Response No.	Total Symptoms	Correct Recognition (TP)	Wrong Recognition (FP)	Missed Recognition (FN)	Correct Recognition (TP)	Wrong Recognition (FP)	Missed Recognition (FN)
1							
2							
…							
n							
Total							

Summary of Experiment		
	Bi-GRU-CRF	**Bi-LSTM-CRF**
Precision		
Recall		
F1 Score		

Experiment Paper B

Objective:

To determine the precision, recall, and f1 score of Bi-GRU-CRF with Naive-Bayes (Model 1) and Bi-LSTM-CRF with Naïve-Bayes (Model 2) in classifying diseases using the Naive-Bayes component of the model.

Materials:

D. Desktop/Laptop

E. Experiment Paper

F. Microsoft Excel

Procedure:

1. Enter the free-text responses of the respondents (test data) containing symptom information to Model 1.
2. Check if the results correctly predicted the disease from the actual disease as diagnosed by the expert.
3. Tally the results according to true positive and false positive.
4. Repeat steps 1-3 for all test data.
5. After feeding the test data, compute the precision, recall, and f1 score.
6. Repeat steps 1-5, now using Model 2.

Experiment Paper 2				
	Model 1		Model 2	
Response No.	Correct Prediction (TP)	Wrong Prediction (FP)	Correct Prediction (TP)	Wrong Prediction (FP)
1				
2				
…				
n				
Total				

Summary of Experiment		
	Model 1	Model 2
Precision		
Recall		
F1 Score		

Experiment Paper C

Objective:

To determine the significant difference between Bi-GRU-CRF with Naive-Bayes (Model 1) and Bi-LSTM-CRF with Naïve-Bayes (Model 2) in terms of accuracy in disease prediction.

Materials:

A. Desktop/Laptop

B. Experiment Paper 2

C. Microsoft Excel

Procedure:

1. Using the Experiment Paper 2, complete table 1 with the gathered results.
2. Compute x^2 using the McNemar Test formula.

Table 1. 2x2 Contingency Table of Prediction of Model 1 and Model 2

	Model 1 *correct*	**Model 1 *wrong***	**Totals**
Model 2 *correct*			
Model 2 *wrong*			
Totals			

Table 2. McNemar's Test Result

Result	**Test Statistics**	**p-value (1-tail)**	**p-value (2-tail)**
McNemar's Test			